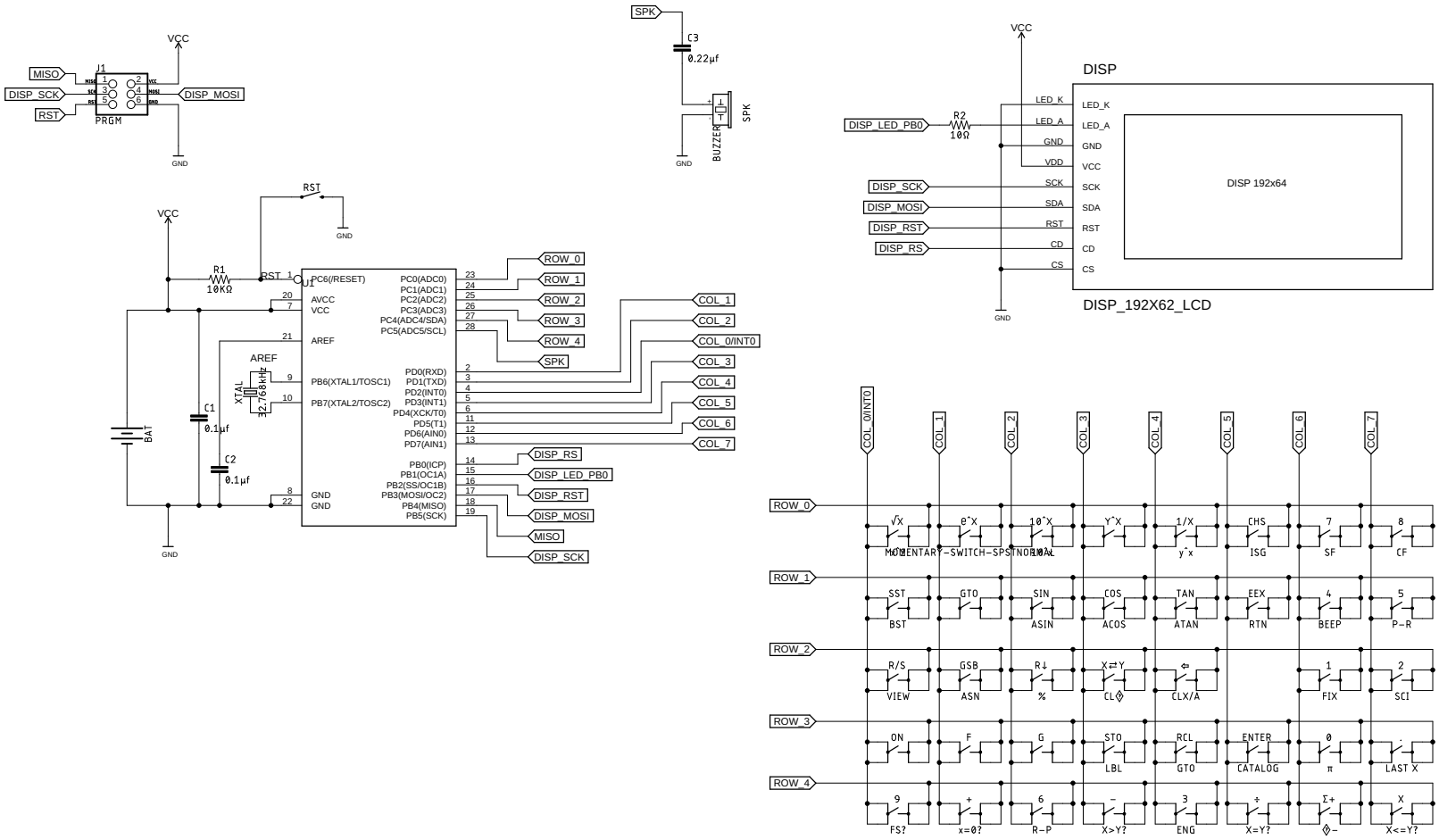
VCC
MISO
DISP_SCK
RST
J1
PRGM
DISP_MOSI
GND
SPK
C3
0.22µf
BUZZER
RST
R1
10KΩ
U1
PC6(/RESET)
AVCC
VCC
AREF
PB6(XTAL1/TOSC1)
PB7(XTAL2/TOSC2)
GND
PC0(ADC0)
PC1(ADC1)
PC2(ADC2)
PC3(ADC3)
PC4(ADC4/SDA)
PC5(ADC5/SCL)
PD0(RXD)
PD1(TXD)
PD2(INT0)
PD3(INT1)
PD4(XCK/T0)
PD5(T1)
PD6(AIN0)
PD7(AIN1)
PB0(ICP)
PB1(OC1A)
PB2(SS/OC1B)
PB3(MOSI/OC2)
PB4(MISO)
PB5(SCK)
XTAL
32.768kHz
C1
0.1µf
C2
0.1µf
BAT
ROW_0
ROW_1
ROW_2
ROW_3
ROW_4
SPK
COL_1
COL_2
COL_0/INT0
COL_3
COL_4
COL_5
COL_6
COL_7
DISP_RS
DISP_LED_PB0
DISP_RST
DISP_MOSI
MISO
DISP_SCK
DISP_LED_PB0
R2
10Ω
LED_K
LED_A
GND
VDD
VCC
SCK
SDA
RST
CD
CS
DISP
DISP 192x64
DISP_192X62_LCD
MOMENTARY-SWITCH-SPSTNORMAL